PROJECT NAME: IU Neurosciences Research Building
PROJECT NUMBER: 00360326
BID PACKAGE:
DATE SENT: 8/29/2012

SUBMITTAL COVER SHEET

PRIME CONTRACTOR: **Scott Prange**
SULLIVAN & POORE, INC.
1015 East 42nd Street
Indianapolis, IN 46205
Phone: 317-925-5341
Fax: 317-923-7060

CA/CM: **Susanna Falkmann**
BSA LIFESTRUCTURES
9365 Counselor's Row
Suite 300
Indianapolis, IN 46240
Phone: 317-819-2097
Fax: 317-819-7288

Item listed is being sent separately via:
Electronic (Fax/E-mail)

The following item is being transmitted to you:
Product Data

Submittal item for Submittal 21 31 13-1 Rev. 0

Item	# Copies	Description	Reason/Action	Requested Return Date	High Priority
21 31 13-1	1	Electric-Drive, Centrifugal Fire Pumps	For review	9/12/2012	No

REMARKS

9/4/2012 - Susanna Falkmann
Other Comment - No Resubmittal Required per Will Maltby's comment below.

9/4/2012 - Will Maltby
Contractor shall determine pump rotation as it was requested in the submitall

Checked only for compliance with design concept of Contract Documents. Contractor shall be responsible for compliance with requirements of Contract Documents, quantities, dimensional suitability for installation, coordination with other trades, and performing work in a safe workmanlike and satisfactory manner.

Contractor Review/Action

Designer Review/Action

- ☐ Furnish as Submitted
- ☐ Furnish as Corrected - Resubmittal Required
- ☐ Furnish as Corrected - No Resubmittal Required
- ☐ Other Comment - Resubmittal Required
- ☒ Other Comment - No Resubmittal Required
- ☐ Revise and Resubmit
- ☐ Other _____
- ☐ Copy sent to Owner

Reviewed by: Will Maltby

Date: 9/4/2012

Sullivan & Poore Inc.
Mechanical Contractors

IU Neurosciences Research Building
Indianapolis, IN

DATE: August 29, 2012

ENGINEER: BSA LifeStructures
9365 Counselors Row, Suite 112
Indianapolis, IN 46240

CONSTRUCTION MANAGER: Messer Construction Co.
6964 Hillsdale Court
Indianapolis, IN 46250

MECHANICAL CONTRACTOR: Sullivan & Poore, Inc.
1015 East 42nd Street
Indianapolis, IN 46205

SUPPLIER: N/A

SUBCONTRACTOR: Rebel Fire Protection
6730 West Horseshoe Road
Morgantown, IN 46160

PRODUCT(S): Fire Protection

MANUFACTURER: Patterson Pump Company & Asco Power Technologies

SPEC. SECTION: 21.31.13- Electric –Drive Centrifugal Pumps
Equipment Schedule- (Accepted VE Item)

APPROVED
FOR GENERAL DESIGN NOT CHECKED FOR DETAILED DIMENSIONS. APPROVAL SUBJECT TO SPECIFICATION REQUIREMENTS.

SULLIVAN & POORE, INC.

Date: 8/29/12 By: AWP

REBEL FIRE PROTECTION, INC.

6730 West Horseshoe Road – Morgantown, IN 46160 Phone & Fax (812) 597-0137

MATERIAL & EQUIPMENT MANUAL

I.U. NEUROSCIENCES RESEARCH BUILDING

I.U. #20084870

320 West 15th Street

Indianapolis, Indiana

REBEL FIRE PROTECTION, INC.
6730 West Horseshoe Road – Morgantown, IN 46160 Phone & Fax (812) 597-0137

TABLE OF CONTENTS

Fire Pump – Spec. Sec. 21-31-13

REBEL FIRE PROTECTION, INC.

6730 West Horseshoe Road – Morgantown, IN 46160 Phone & Fax (812) 597-0137

FIRE PUMP

Includes, Controllers, Associated Equipment and Jockey Pump for Complete System

Pumping Technology for Tomorrow's World

THE FORCE IN FIRE PROTECTION

This is the preferred fire pump for high and low pressure pumping, and also special service pumping requirements. It is specially designed to meet the rigid mechanical and hydraulic specifications required for approval and listing by UL and FM for Fire Pump Service.

Patterson Fire Pumps supply water to automatic sprinkler systems, fire hydrants, standpipes, deluge systems, fog systems or any other fire protection system.

These horizontal* fire pumps are offered in a full range with capacities from 150 to 4,000 GPM, and pressure ratings from 40 to 390 PSI. Each unit is sized for individual requirements.

Patterson pumps are furnished with approved diesel engines, steam turbines or electric motors. All pumps are guaranteed to provide 150% of rated capacity and a pressure not less than 65% of rated head.

Listed by Underwriters' Laboratories in the U.S. and Canada. Approved by Factory Mutual Association. Member of Hydraulic Institute and National Fire Protection Association.

GPM	PSI	Model Series
150	45-109	3 x 2MN
**200-450	40-100	3 x 2MN, 4 x 4MN
500	40-335	4 x 3DMD, 4 x 3ME, 5 x 3MAC, 5 x 3DMD, 6 x 5DMD, 6 x 5MAA, 6 x 5 x 17SSC
750	40-390	5 x 4M, 5 x 4MAC, 6 x 3HW, 6 x 5 x 14SSC, 6 x 5M, 6 x 5MAA, 6 x 5DMD, 6 x 5 x 17SSC
1000	40-265	8 x 6MJ, 6 x 5M, 8 x 5MAA, 8 x 6YR, 6 x 5 x 14SSC, 6 x 5 x 17SSC
1250	100-155	8 x 6YR, 8 x 6 x 12SSC
1500	40-155	8 x 6MI, 8 x 6YR, 8 x 6MABS, 8 x 6MAA, 8 x 6 x 12SSC, 10 x 8 x 17SSC
2000	65-214	8 x 6YS, 10 x 8M, 10 x 8 x 17SSC
2500	77-210	8 x 6YS, 10 x 8M, 10 x 8 x 17SSC, 12 x 10MAA
3000-4000	80-188	12 x 8MAA
GPM	**PSI**	**VERTICAL WET PIT PUMPS**
150-300	40-138	4 x 3 V.I.P.
400-500	41-135	5 x 3 V.I.P.
***750	47-148	6 x 6 V.I.P.

UL and ULC/cUL Listed/FM Approved
* Vertical mounted units are also available for most sizes.

** Special Service Fire Pumps
*** ULC/cUL Listed and FM Approved Only

Patterson Pump Company
A Subsidiary of The Gorman-Rupp Company
Post Office Box 790 • Toccoa, Georgia 30577
(706) 886-2101 • FAX: (706) 886-0023

© 1994 Patterson Pump Company

SUBMITTAL DATA
FIRE PUMP AND ACCESSORIES

JOB NAME; ***I.U.P.U.I. NEUROSCIENCES RESEARCH BUILDING***

CONTRACTOR; ***REBEL FIRE PROTECTION***

****

FIRE PUMP RATING; ***1000 GPM @ 115 PSI***

ONE (1) PATTERSON MODEL 6x5x17 SSC HORIZONTAL SPLIT CASE, DOUBLE SUCTION CENTRIFUGAL FIRE PUMP, CAST IRON, BRONZE FITTED, U.L. LISTED, F.M. APPROVED, BUILT AND TESTED IN ACCORDANCE WITH NFPA-20 STANDARDS AND INCLUDING;

-6" SUCTION FLANGE, 125 LB. RATING
-5" DISCHARGE FLANGE, 125 LB. RATING
-FACTORY HYDRO TEST TO 350 PSI
-FACTORY PERFORMANCE TEST WITH CERTIFIED CURVE ISSUED
-STEEL BASE, FLEXIBLE JAW TYPE COUPLING AND OSHA APPROVED COUPLING GUARD
-100 HP MOTOR, ***1770 RPM,*** *3-60-460 VOLT, U.L. LISTED FOR FIRE PUMP SERVICE, 404TS FRAME, FULL LOAD AMPS= 115*
-FIRETROL MODEL FTA-1930 COMBINED AUTOMATIC & MANUAL FIRE PUMP CONTROLLER, ***SOLID STATE "SOFT" STARTING,*** *UL/FM APPROVED FOR 100 HP @ 460 VOLTS, 100,000 AMP WITHSTAND RATING. CONTROLLER COMES WITH DRY CONTACTS FOR REMOTE ALARMS FOR; PUMP RUN, POWER FAILURE AND PHASE REVERSAL. CONTROLLER IS "SUITABLE FOR SERVICE ENTRANCE" AND INCLUDES A BUILT IN* ***FTA-950 AUTOMATIC TRANSFER SWITCH,*** *UL/FM APPROVED FOR FIRE PUMP SERVICE AND INCLUDING "ENGINE START" CIRCUIT*
-1/2" AUTOMATIC AIR RELEASE VALVE
-3/4" CASING RELIEF VALVE, U.L. LISTED, CLA VALVE MODEL 55L
-SET, SUCTION AND DISCHARGE GAUGES WITH SHUTOFF COCKS, GLYCERIN FILLED
-JOCKEY PUMP, PATTERSON MODEL PM1-12, RATED 5 GPM @ 125 PSI, 1.5 HP, 3-60-460 VOLT MOTOR
-JOCKEY PUMP PANEL, PATTERSON MODEL FPJPC, RATED 1.5 HP, 3-60-460 VOLT
-6" LOW SUCTION CONTROL VALVE, CLA-VALVE 50B-5KG, FACTORY SET AT 20 PSI, GLOBE PATTERN, 150 LB. FLANGES, FM APPROVED

RESPECTFULLY SUBMITTED BY; Bill Aliff

BILL ALIFF
PATTERSON PUMP
billaliff@comcast.net cell : (317-403-0550)

PREPARED 7-18-2012

MOTOR	A	B	C	F	G
326 T	55.9/32"	16.1/2"	11.1/32"	28"	60"
326 TS	55.1/4"	15"	14.1/2"	28"	60"
364 T	57.9/32"	17.3/8"	11.5/32"	28"	60"
365 TS	55.5/32"	15.3/4"	11.21/32"	28"	60"
404 TS	55.3/32"	17"	12.11/32"	28"	62"
405 TS	59.19/32"	17.3/4"	13.5/32"	28"	62"
364 TS	55.1/4"	15.1/4"	11.1/4"	28"	60"
365 T	57.7/8"	17.3/8"	11.3/4"	28"	60"
324 T	55.1/16"	15.3/4"	10.3/16"	28"	60"
324 TS	55.9/16"	14.1/4"	10.3/16"	28"	60"
444 T	65.7/8"	23.1/4"	14.1/2"	36"	74"
444 TS	59.1/8"	19.1/2"	14.1/2"	32"	68"
445 T	65.7/8"	24.1/4"	15.1/2"	36"	74"
445 TS	65.1/8"	20.1/2"	15.1/2"	32"	68"

NOTE: 1) CLOCKWISE ROTATION SHOWN WHEN VIEWED FROM DRIVER END, SUCTION ON RIGHT, DISCHARGE ON LEFT.
FOR COUNTERCLOCKWISE ROTATION, SUCTION IS ON LEFT, DISCHARGE IS ON RIGHT. WHEN VIEWED FROM DRIVER END.

2) 5" GROUT HOLES ARE PROVIDED

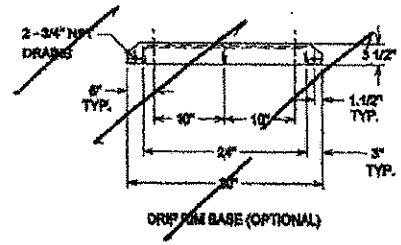

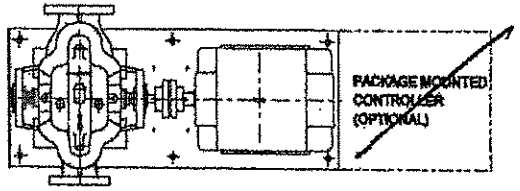

CONTROLLER	AA	BB	CC
FIRETROL FTA1000A	28"	37.5/8"	34"

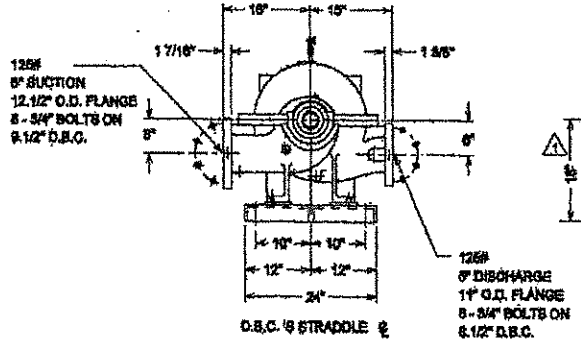

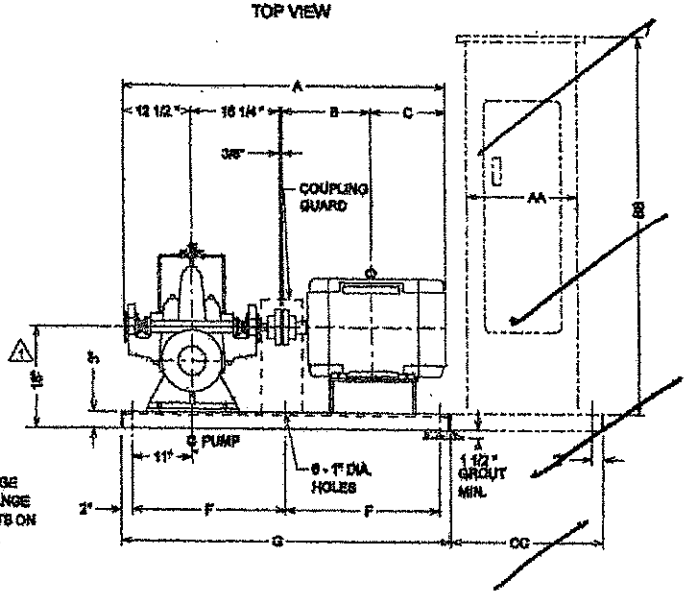

UNIT FIRE PUMP OUR ORDER No.
JOB TUPUI CUSTOMER ORDER No.
NEUROSCIENCES RESEARCH BLDG
PUMP 6x5x17 CAPACITY 1000 G.P.M. @ 266 FT. HD. (115 PSI)
MOTOR HORIZ. MAKE WEG FRAME 404TS
100 H.P. 3 PHASE 60 CYCLE 460 VOLT 1770 R.P.M.
CONTROLLER FIRETROL SOFT START W/ ATS
CERTIFIED BY: Bill Aluff DATE 7-18-2012

REV. -1 ECN# 4065 REV. -2 ECN# 5551 REV. -3 ECN# 7724 8-21-98
REV 6 ECR #16455 DM 10/11/04
REV 5 ECR #17907 KM 6-03-04
4 ECN# 10268 LH 5-23-00 ADDED TOP VIEW

PATTERSON PUMP CO.
A SUBSIDIARY OF THE GORMAN-RUPP COMPANY

OUTLINE DIMENSIONS for 6 X 5 X 17 SSO PUMP

DWG. NO.	AC - 12591-6
DRAWN WILLIAMS/WR	DATE 9-25-95/4-25-00
SCALE NONE	APPRVD. A.P.

PROJECTED CURVE ----

Patterson Pump Company

Serial No: FP-
Pump Type:6X5X17SSC
Imp Pattern:C-10892
Imp Dia:16.25
Vane Tips:.063
No. Stages:1
Certified By:_____AL_____

1000 GPM @ 115 PSI

Sold To:
Test Driver:WESTINGHOUSE
HP:150
Eff%:0.924
Test RPM:1780
Test Type:Performance Test
Approved By:_____

Job: 183344
GPM:1000
Ft. Head: 266
Rated RPM:1775
Test Num:
Date:
Witnessed By:_____

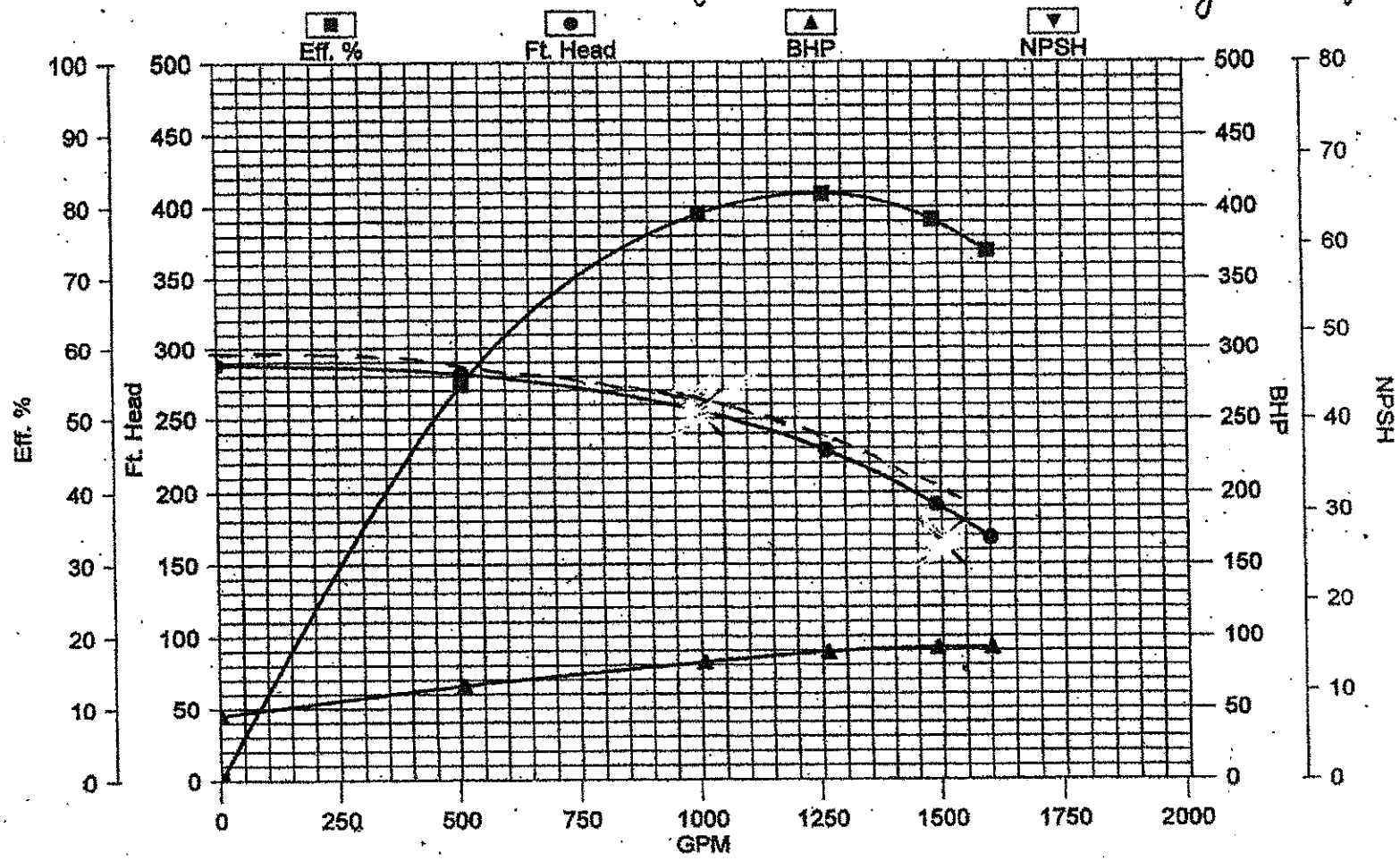

weg		No.:
		Date: 7/20/2010

DATA SHEET
Three-phase induction motor - Squirrel cage rotor

Customer	:
Product line	: Three-Phase : ODP (IP21/IP23) - High Efficiency

Frame	: 404TS
Output	: 100 HP
Frequency	: 60 Hz
Poles	: 4
Full load speed	: 1775
Slip	: 1.39 %
Voltage	: ~~293-230~~/460 V
Rated current	: ~~364-200~~/115 A
Locked rotor current	: ~~1450~~/725 A
Locked rotor current (I/In)	: 6.3
No-load current	: ~~72.0~~/36.0 A
Full load torque	: 292 lb.ft
Locked rotor torque	: 240 %
Breakdown torque	: 250 %
Design	: B
Insulation class	: F
Temperature rise	: 80 K
Locked rotor time	: 10 s (hot)
Service factor	: 1.15
Duty cycle	: S1
Ambient temperature	: -20°C - +40°C
Altitude	: 1000 m
Degree of Protection	: IP23
Approximate weight	: 928 lb
Moment of inertia	: 18.269 sq.ft.lb
Noise level	: 69 dB(A)

100 HP
460 V.
FLA = 115

	D.E.	N.D.E.
Bearings		
Regreasing interval		
Grease amount		

Load	Power factor	Efficiency (%)
100%	0.87	94.1
75%	0.84	94.1
50%	0.74	93.6

Notes:

U.L. LISTED FOR "FIRE PUMP SERVICE"

Performed by:	Checked:

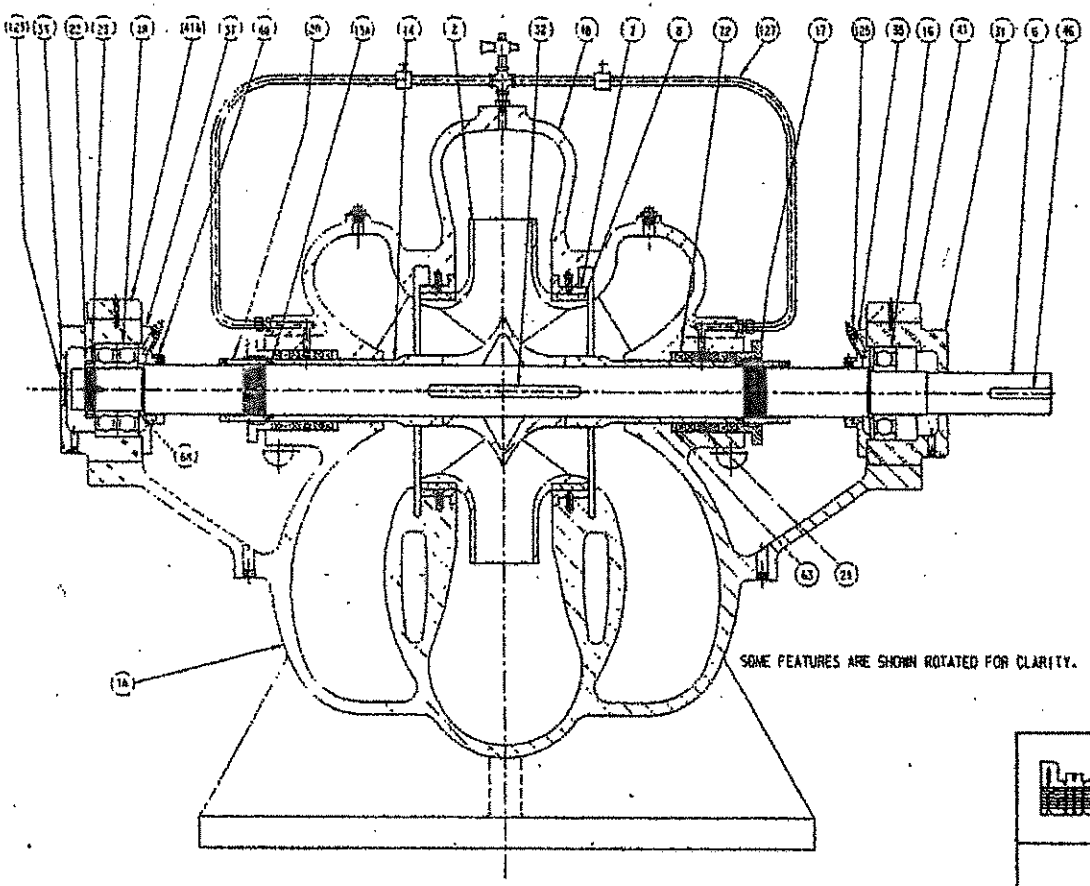

ITEM	DESCRIPTION
1A	LOWER CASING
1B	UPPER CASING
2	IMPELLER
6	SHAFT
7	CASING RING
8	IMPELLER RING
13	PACKING
13A	SHAFT SLEEVE PACKING
14	SHAFT SLEEVE
16	INBOARD BEARING
17	PACKING GLAND
18	OUTBOARD BEARING
20	SLEEVE NUT
22	LOCKNUT
23	LOCKWASHER
29	LANTERN RING
31	INBOARD BEARING HOUSING
32	IMPELLER KEY
33	OUTBOARD BEARING HOUSING
35	INBOARD BEARING COVER
37	OUTBOARD BEARING COVER
40	DEFLECTOR
41	INBOARD BEARING CAP
41A	OUTBOARD BEARING CAP
46	COUPLING KEY
63	PACKING BOX BUSHING
66	SHAFT COLLAR
123	BEARING END COVER
125	GREASE FITTING
127	SEAL WATER PIPING

PATTERSON PUMP COMPANY
A SUBSIDIARY OF THE DORMAN-MUPP COMPANY
TOCCOA, GEORGIA

ASSEMBLY SECTION
for
GROUP 4 PUMPS

DRAWN	DATE	DRAWING NO.
HOWARD	5-25-97	C02-67157
SCALE NONE	APPRVD A.P.	

ROTATIONAL VIEWS

PATTERSON PUMP COMPANY
A SUBSIDIARY OF THE GORMAN-RUPP COMPANY

SPECIFY ROTATION

CLOCKWISE ROTATION

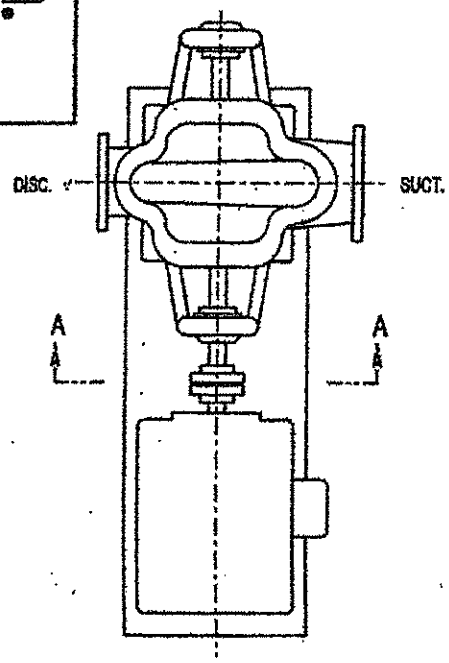

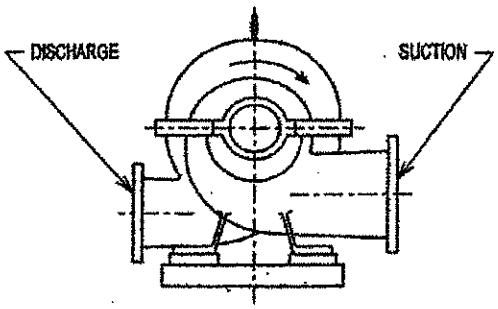

VIEW A-A

COUNTERCLOCKWISE ROTATION

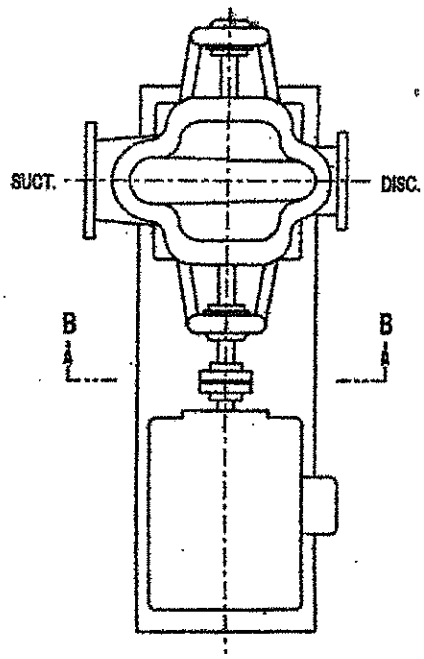

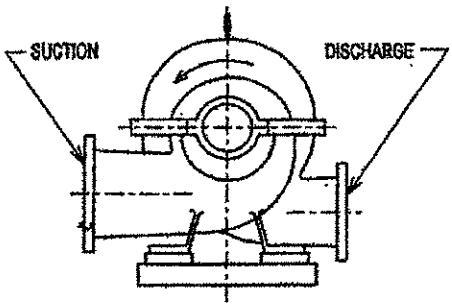

VIEW B-B

AR-18100

FTA1930
DIGITAL SOLID STATE SOFT START FIRE PUMP CONTROLLERS
WITH POWER TRANSFER SWITCH

STANDARD SUBMITTAL PACKAGE

Firetrol®

NOTE: The drawings included herein are for standard controllers.
Actual "as built" drawings may differ from those seen here.

ASCO Power Technologies®

SBP1930-61

FTA1930
Digital Solid State Starting Electric Fire Pump Controllers
Product Description

Fire Pump Controllers for Business-Critical Continuity

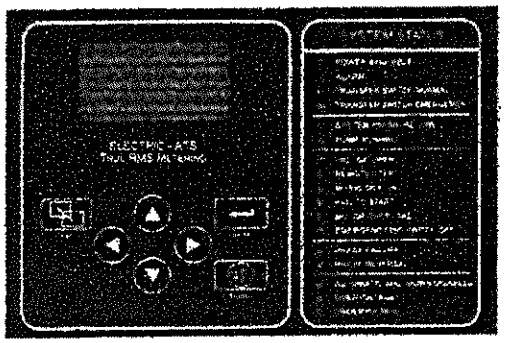

Description—Firetrol® FTA1930 Digital Solid State Starting Fire Pump Controllers feature soft start, soft stop and system sensing capabilities that not only provide for reduced current starting, but also offer an improved level of hydromechanical performance. The controller monitors, displays and records fire pump system information. When called to run, the motor will accelerate beginning at 100% of motor FLA up to a maximum of 300% FLA while rated torque is reduced to 15%. When stopping, the motor will decelerate to a preset level and pause, allowing for a restart if required, limiting stress in the piping system. If no additional starting causes are present, the motor will continue to decelerate to a full stop. This controller helps to reduce water hammer in the system.

Approvals – Firetrol fire pump controllers are listed by Underwriters' Laboratories, Inc., in accordance with UL218, *Standard for Fire Pump Controllers*, CSA, *Standard for Industrial Control Equipment*, and approved by Factory Mutual. They are built to meet or exceed the requirements of the approving authorities as well as NEMA and the latest editions of NFPA 20, *Installation of Centrifugal Fire Pumps*, and NFPA 70, *National Electrical Code*.

Standard Features—The following are included as standard with each controller:

- Voltage surge protector
- Main Disconnect Switch sized for connected motor horsepower and voltage
- Fire pump Circuit Breaker
- Single handle Isolating Disconnect Switch/Circuit Breaker mechanism
- Motor contactor
- Emergency Manual Run Mechanism to mechanically close motor contactor contacts in an emergency condition
- Built-in Start and Stop push-buttons to bypass automatic start circuits
- Minimum Run Timer / Off Delay Timer
- Daylight Savings Time Option
- Weekly Test Timer
- Elapsed Time Meter
- Door mounted display/interface panel featuring a 128 x 64 pixel backlit LED Graphical Display, Membrane Type User Control Push-buttons and easy to read LED Indicators for:
  - *POWER AVAILABLE*
  - *ALARM*
  - *TRANSFER SWITCH NORMAL* (If unit ordered with Automatic Power Transfer Switch)
  - *TRANSFER SWITCH EMERGENCY* (If unit ordered with Automatic Power Transfer Switch)
  - *SYSTEM PRESSURE LOW*
  - *PUMP RUNNING*
  - *DELUGE OPEN*
  - *REMOTE START*
  - *INTERLOCK ON*
  - *FAIL TO START*
  - *MOTOR OVERLOAD*
  - *EMERGENCY ISO SWITCH OFF* (If unit ordered with Automatic Power Transfer Switch)
  - *PHASE FAILURE*
  - *PHASE RAEVERSAL*
  - *AUTOMATIC SHUTDOWN DISABLED*
  - *OVERVOLTAGE*
  - *UNDERVOLTAGE*
- Digital Pressure Display
- USB Host Controller and Port
- Solid State Pressure Transducer
- Data Log
- Event Log (3000 Events)
- True RMS Metering with simultaneous 3 Phase Display of Amps, Volts, Frequency, Pressure and Alarm Messages
- Disk Error message
- Disk Near Full message
- Pressure Error message
- Motor Over 320% message
- Local Start message
- Remote Start message
- Emergency Start message
- Fail To Start message
- Undervoltage message
- Overvoltage message
- NEMA Type 2 enclosure
- Suitable for use as Service Equipment
- Each standard controller comes with user configurable options for:
  - Interlock Alarm
  - Low Pressure Audible
  - Low Suction
  - Pump Run
  - User Defined Input
  - Weekly Test

Firetrol

EMERSON.
Network Power

FTA950
Power Transfer Switch for Electric Fire Pump Controllers
Product Description

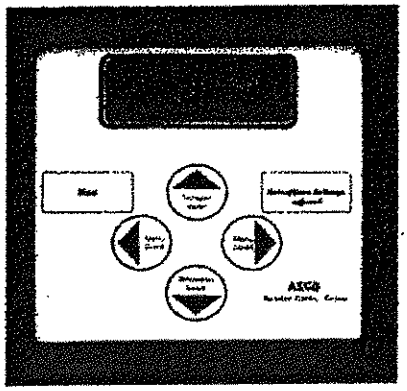

Description—Firetrol® Power Transfer Switches are available completely assembled with Firetrol Electric Fire Pump Controllers; full or reduced voltage types. The power transfer switches are built for use with generator set or 2nd utility use. The entire package of power transfer switch and controller is completely factory assembled, wired, tested and shipped as a complete unit for easy field connection to the power sources and the fire pump motor.

Approvals—Firetrol power transfer switches are listed by Underwriters' Laboratories, Inc., in accordance with UL218, *Standard for Fire Pump Controllers*; UL1008, *Automatic Transfer Switches*; UL508, *Industrial Control Equipment*, CSA, *Standard for Industrial Control Equipment*; and approved by Factory Mutual. They are built to meet or exceed the requirements of the approving authorities as well as NEMA and the latest editions of NFPA 20, *Installation of Centrifugal Fire Pumps*, and NFPA 70, *National Electrical Code*.

Standard Features—The following are included as standard with each transfer switch:

- Emergency power source disconnect switch sized for connected motor horsepower and voltage
- Fire pump circuit breaker
- Mark II monitors for overcurrent tripping (non-thermal) of circuit breaker and alarm indicator for phase failure/phase reversal
- 3-pole, double throw transfer switch mechanism, electrically operated, mechanically held
- ASCO® Group 5 Control module providing for the following:
  - -Door mounted operator interface panel with 4 line LED display
  - -In-phase monitor
  - -Programmable engine exerciser
  - -Transfer switch data logging
  - -Differential voltage sensing on all phases of the normal power source
  - -Voltage sensing of the emergency power source
  - -Frequency sensing of the emergency power source
  - -Transfer time delay to compensate for momentary power outages of the normal source
  - -Retransfer from emergency to normal source is automatically delayed unless the emergency source fails
  - -Cool-down timer for unloaded running of the generator set after retransfer to the normal power source
  - -Instantaneous retransfer to normal if the emergency source fails and the normal source is available
  - -3 second transfer restart delay to reduce current surges when transferring to or from the emergency source
  - -NO and NC engine control contacts to start the generator set when the normal power source fails
- Transfer Switch Normal LED
- Transfer Switch Emergency LED
- Emergency Isolating Switch Open LED
- Test Selector Switch
- Transfer By-pass Switch
- Silence Alarm Pushbutton
- Emergency Isolating Switch Open and Transfer Switch in Emergency Audible Alarms
- Output contacts (NO and NC) for Generator Start, Emergency Isolating Switch Open and Transfer Switch position indicators
- NEMA Type 2 enclosure (IEC IP11)

Firetrol®

EMERSON.
Network Power

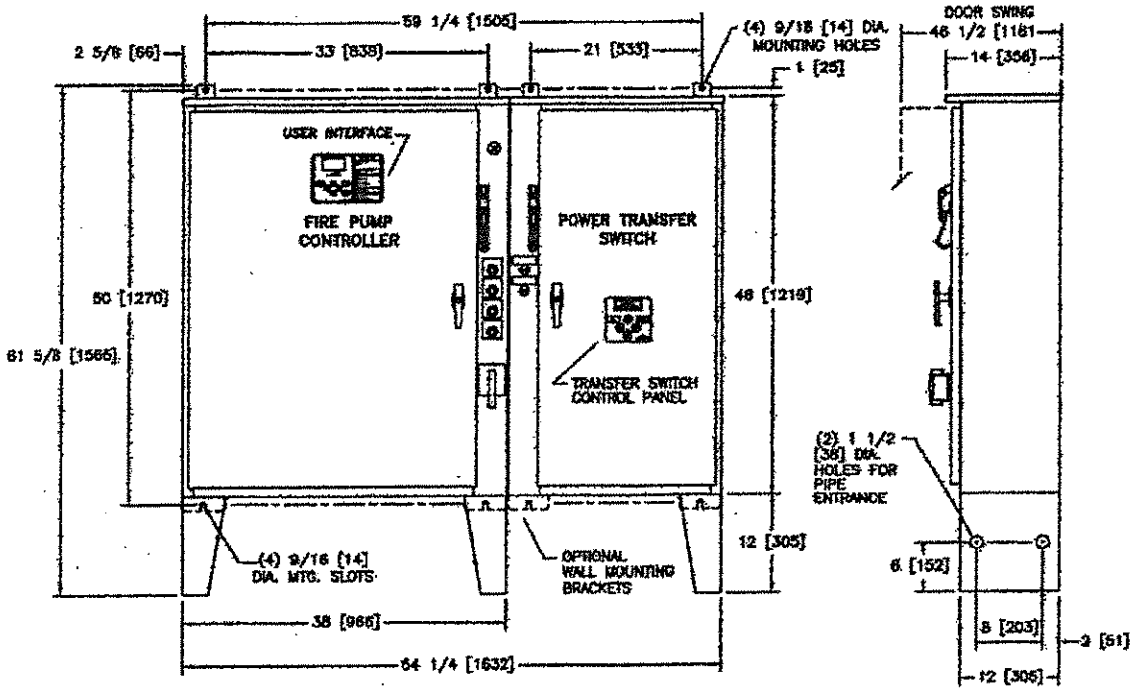

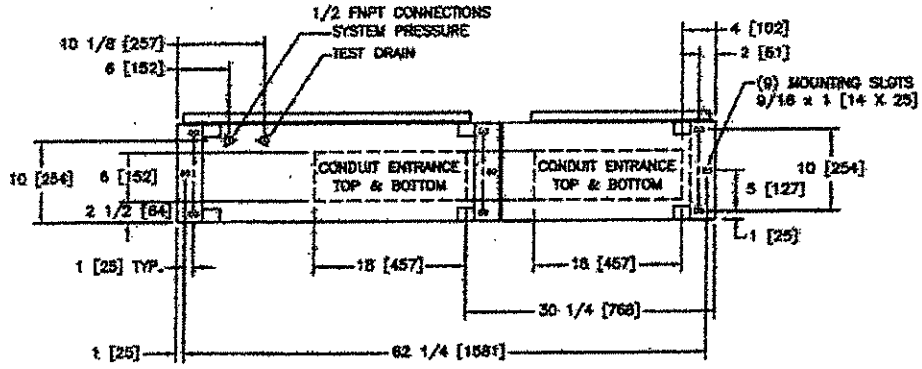

STANDARD WITHSTAND RATINGS 200–600V – 100,000 Amps RMS Sym. INTERMEDIATE WITHSTAND RATINGS 200–600V – 150,000 Amps RMS Sym. HIGH WITHSTAND RATINGS 200–600V – 200,000 Amps RMS Sym.	
LINE VOLTAGE	MOTOR HORSEPOWER
200	☐ 3–50
208	☐ 3–50
220–240	☐ 3–60
380–415	☐ 3–75
440–480	☒ 3–125
550–600	☐ 3–150

100 HP
460 VOLT

APPROXIMATE SHIPPING WEIGHT
625 [283]

DO NOT INSTALL IN AMBIENT TEMPERATURES BELOW 41°F [5°C].

ALL DIMENSIONS – INCHES [MM]

SHIPPING WEIGHT – POUNDS [KG]

THIS DIMENSION DRAWING COVERS FTA1930 CONTROLLERS AT THE HORSEPOWER, VOLTAGE AND WITHSTAND RATINGS AS LISTED IN THE TABLE. FOR OTHER HORSEPOWER OR WITHSTAND RATINGS, REFER TO ED1930–02.

SPECIFICATIONS AND DIMENSIONS SUBJECT TO CHANGE WITHOUT NOTICE. DO NOT USE FOR CONSTRUCTION. REQUEST CONSTRUCTION DRAWINGS FROM FIRETROL OR YOUR LOCAL FIRETROL REPRESENTATIVE.

ADDED COMPONENTS TO MEET FM REQUIREMENTS	REV. TO B	ECN NO. 228561	BY JG	APP. TEF	DATE 06-17-16
UPDATED TO MATCH HMI USER INTERFACE	REV. TO A	ECN NO. 228132	BY JG	APP. TEF	DATE 11-15-99

DIMENSIONS AND SHIPPING WEIGHT FTA1930 WITH FTA950

DIGITAL SOLID STATE REDUCED CURRENT FIRE PUMP CONTROLLER WITH POWER TRANSFER SWITCH

THIRD ANGLE PROJECTION

	BY	DATE
DRAWN BY	TEF	06-09-06
CHECKED		
PROJECT ACCEPTANCE		
FINAL APPROVAL	TEF	06-09-06

MANUFACTURING TOLERANCES TO BE IN ACCORDANCE WITH ASCO PROCEDURE MP-1-003. FOR PLASTIC PARTS SEE MP-1-006

ASSOC. REF. NO.

PROPERTY OF ASCO POWER TECHNOLOGIES. USE PERMITTED FOR OUR WORK ONLY. ALL RIGHTS OF DESIGN OR INVENTION ARE RESERVED.

ASCO® ASCO Power Technologies, L.P. Florham Park, New Jersey 07932 U.S.A.

COMPUTER GENERATED DRAWING

SCALE 1:1 SIZE A

DWG. NO. DD1930-61

DRAWING REV. B ECN NO. 228564 SHEET 1 OF 1

Firetrol®

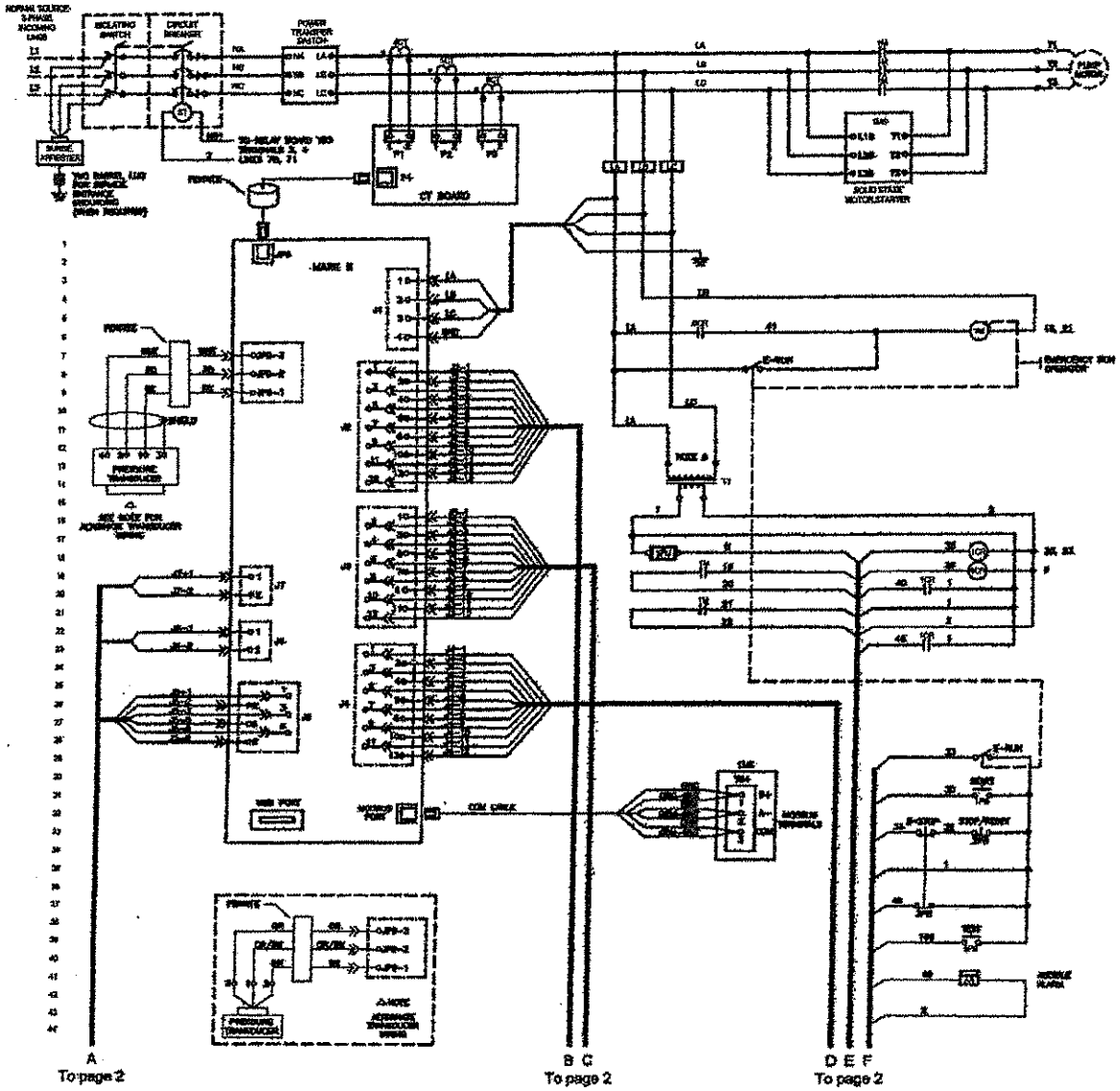

ADDED TEST SOLENOID AND AUDIBLE ALARM TO COMPLY WITH NEW FM STD.	REV. TO B	ECN NO. 228528	BY JC	APD. TEF	DATE 05-25-09
CHANGED FC-1002 TO CT BOARD	REV. TO C	ECN NO. 228138	BY JC	APD. TEF	DATE 11-13-08
REMOVED CS AUXILIARY CONTACT AND TRANSFORMER T2	REV. TO A	ECN NO. 222028	BY JC	APD. TEF	DATE 10-27-08

WIRING SCHEMATIC — PTA1050 W/FTA050

DIGITAL SOLID STATE REDUCED CURRENT FIRE PUMP CONTROLLER WITH POWER TRANSFER SWITCH

THIRD ANGLE PROJECTION

	BY	DATE	
DRAWN BY	TEF	05-28-09	MANUFACTURING TOLERANCES TO BE IN ACCORDANCE WITH ASCO PROCEDURE SP-1-001. FOR PLASTIC PARTS SEE SP-1-020
CHECKED			PROPERTY OF ASCO POWER TECHNOLOGIES, LP. PERMITTED FOR OUR WORK ONLY. ALL RIGHTS OF REPRO OR REPRODUCTION ARE RESERVED.
PROJECT APPROVAL			
FINAL APPROVAL	TEF	05-28-09	

ASCO® ASCO Power Technologies, LP. FLORHAM PARK, NEW JERSEY 07932 U.S.A.

COMPUTER GENERATED DRAWING

SCALE 1:1 SIZE A

DWG. NO. W31930-55

REVISION REV. D ECN NO. 228528 SHEET 1 OF 2

Firetrol®

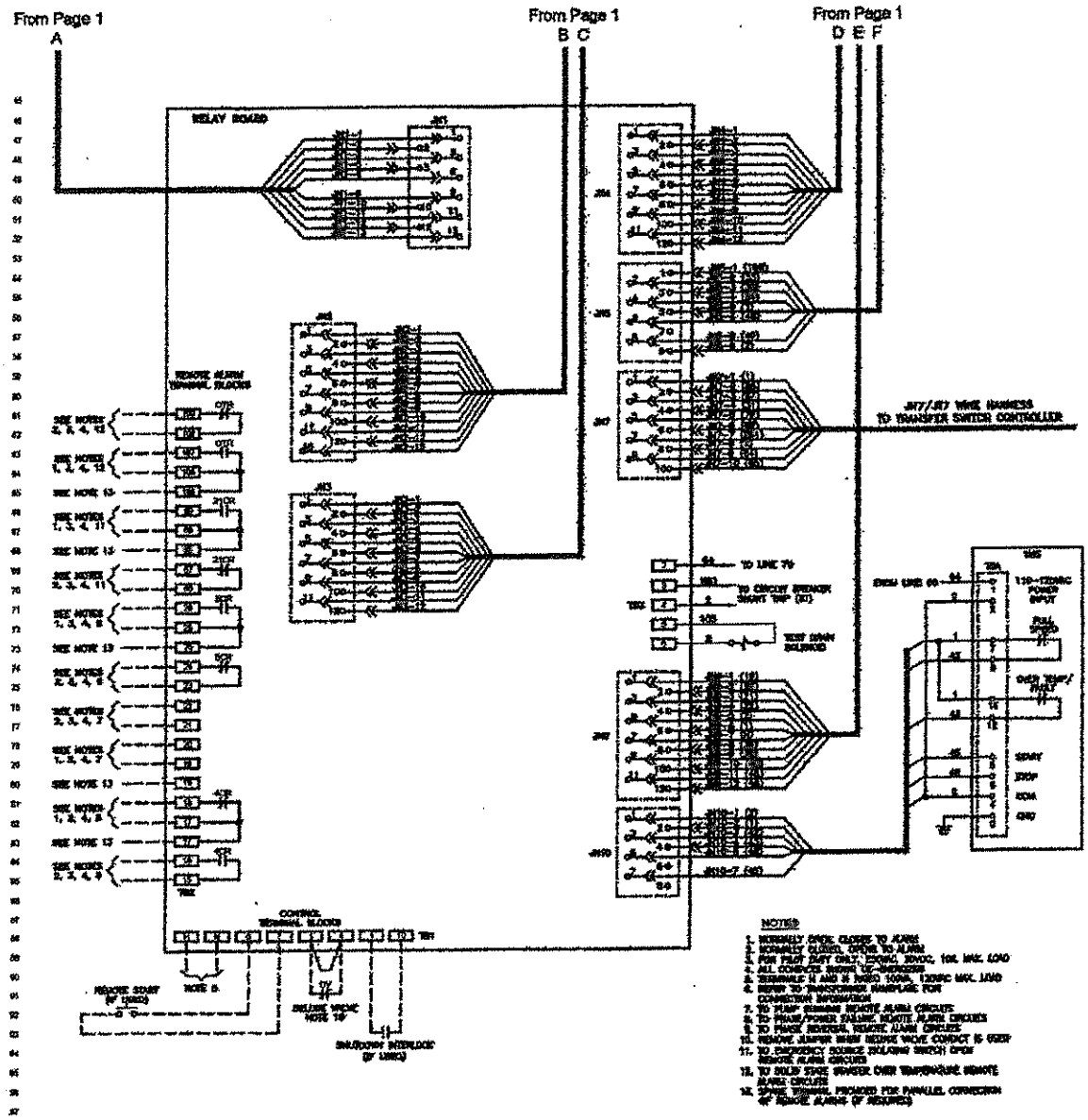

ADDED TEST SOLENOID AND AUDIBLE ALARM TO COMPLY WITH NFPA 20 STD.	REV. TO B	ECN NO. 228525	BY JC	APP. TEF	DATE 08-12-08
CHANGED PC-1054 TO CT BOARD	REV. TO C	ECN NO. 228128	BY JC	APP. TEF	DATE 11-13-08
REMOVED CB AUXILIARY CONTACT AND TRANSFORMER T2	REV. TO D	ECN NO. 228528	BY JC	APP. TEF	DATE 08-17-09

WIRING SCHEMATIC — FTA1050 W/FTA050

DIGITAL SOLID STATE REDUCED CURRENT FIRE PUMP CONTROLLER WITH POWER TRANSFER SWITCH

THIRD ANGLE PROJECTION

Firetrol®

	BY	DATE
DRAWN BY	TEF	05-20-08
CHECKED		
PROJECT ENGINEER		
TECH. APPROVAL	TEF	05-20-08

MANUFACTURING TOLERANCES TO BE IN ACCORDANCE WITH ASCO PROCEDURE SP-1-005. FOR PLASTIC PARTS SEE SP-1-025

GENERAL REF. NO.

PROPERTY OF ASCO POWER TECHNOLOGIES. USE PERMITTED FOR OUR WORK ONLY. ALL RIGHTS OF DESIGN OR INVENTION ARE RESERVED.

ASCO® ASCO Power Technologies, L.P. Florham Park, New Jersey 07932 U.S.A.

COMPUTER GENERATED DRAWING

SCALE 1:1 SIZE A

DWG. NO. W91930-55

DRAWING NO. D ECN NO. 228528 SHEET 2 OF 2

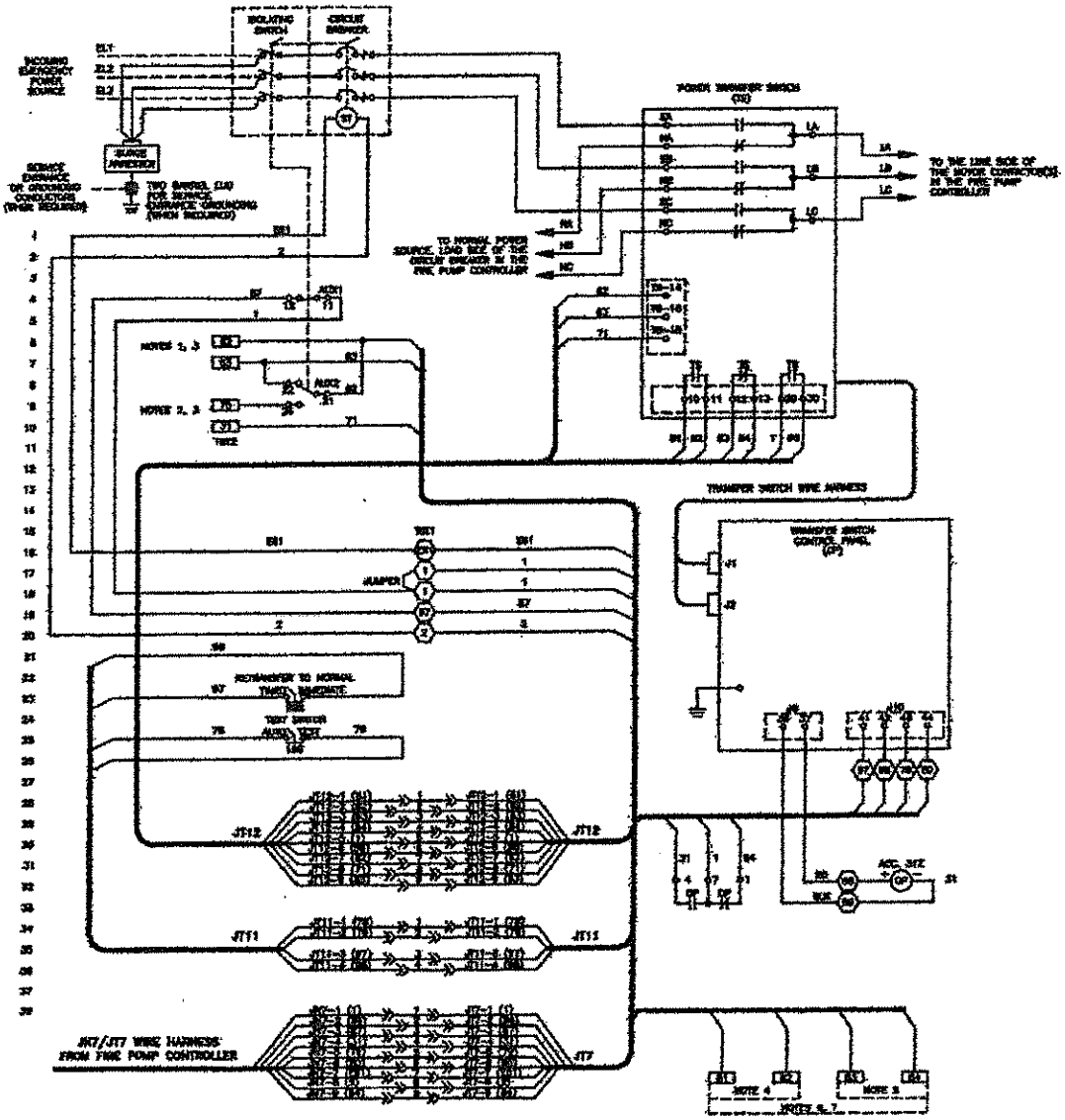

COMPONENT LOCATION

AUX1 – AUXILIARY SWITCH 1, CLOSES WHEN EMERGENCY ISOLATING IS OPENED – (NC)

AUX2 – AUXILIARY SWITCH 2, INHIBITS GEN-SET FROM STARTING IF EMERGENCY ISOLATING SWITCH IS OPENED – (NO)

▭ – FIELD CONNECTION TERMINAL BLOCK

○ – INTERCONNECTION TERMINAL BLOCK (FOR FACTORY USE ONLY)

NOTES:

1 – NORMALLY CLOSED, OPENS ON POWER SOURCE 2
2 – NORMALLY OPEN, CLOSES ON POWER SOURCE 2
3 – GEN-SET START CONTACTS RATED 1 / 2 AMP, 30 VDC
4 – NORMALLY OPEN, CLOSES ON EMERGENCY
5 – NORMALLY CLOSED, OPENS ON EMERGENCY
6 – TRANSFER SWITCH POSITION RELAY, 4 AMP CONTACTS
7 – CONTACT RATING 5 AMP, MAX. 240 VAC, 28 VDC

UPDATED TO COMPLY WITH NEW FM STD.				REV. TO A	SCN NO.	BY / APP. / DATE
WIRING SCHEMATIC		FTA950				THIRD ANGLE PROJECTION
FIRE PUMP POWER TRANSFER SWITCH FOR GEN-SET AND SECOND UTILITY POWER SOURCE						
DRAWN BY	TEF	08-25-10	MANUFACTURING TOLERANCES TO BE IN ACCORDANCE WITH ASCO PROCEDURE MP-1-003 FOR PLASTIC PARTS SEE MP-1-006	JOBSH. REF. NO.	COMPUTER GENERATED DRAWING	
CHECKED			PROPERTY OF ASCO POWER TECHNOLOGIES. USE PERMITTED FOR OUR WORK ONLY. ALL RIGHTS OF DESIGN OR INVENTION ARE RESERVED.		SCALE n/a	SIZE A
PROJECT APPROVAL					DWG. NO. W8950-55	
FINAL APPROVAL	TEF	08-30-10	ASCO® ASCO POWER TECHNOLOGIES, L.P. FLORHAM PARK, NEW JERSEY 07932 U.S.A.		DRAWING REV. A	SCN NO. 228528 SHEET 1 OF 1

Firetrol®

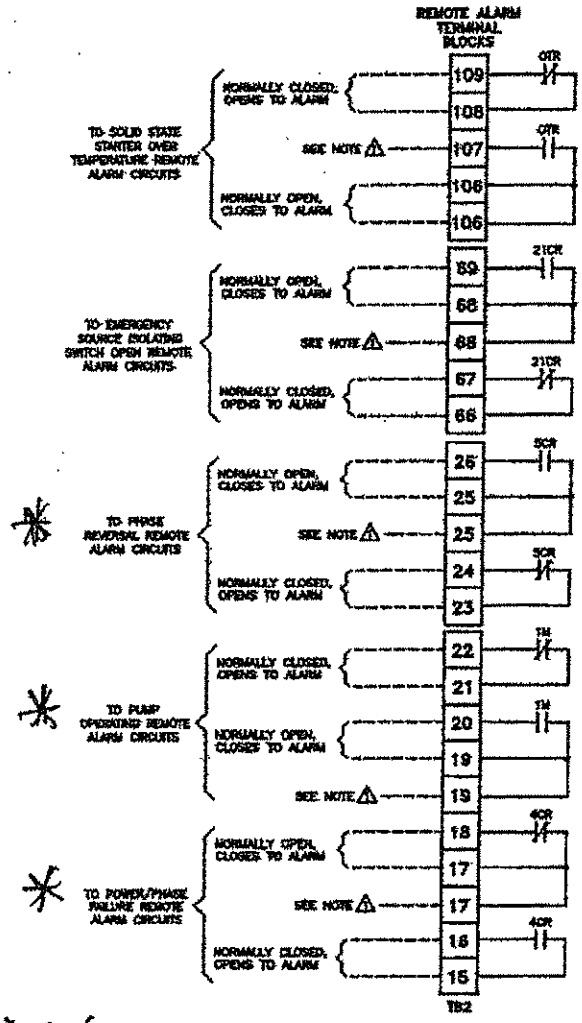

4 SPARE TERMINALS PROVIDED FOR PARALLEL CONNECTION OF REMOTE ALARMS (IF REQUIRED)

DRY CONTACTS FOR REMOTE ALARM PANEL

-NOTE- ALARM CONTACT RATING PILOT DUTY 250 VAC, 30 VDC 10 A. MAX. LOAD

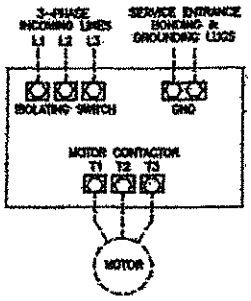

NOTES

1- Incoming line terminals are provided to accommodate wire sizes at 125% of motor full load current per NFPA 70-2006, *National Electrical Code*, Table 430-250, Section 695.4(a), and Table 310-16, 75° rated Copper conductors.

2- Controller is phase rotation sensitive. Incoming lines L1, L2 and L3 must be in ABC, right hand rotation sequence for proper operation of the phase monitor.

3- Motor connections shown are typical. Since motor connections vary widely, refer to the motor connection diagram for specific wiring arrangement.

4- For incoming line terminals and motor terminals field wire capacity refer to drawing FC1930-51

NOTE: USE COPPER CONDUCTORS ONLY FOR ALL CONNECTIONS

NOTE: TERMINALS FOR CUSTOMER CONNECTIONS REQUIRE 3.5MM SLOTTED SCREW DRIVER

TERMINAL TIGHTENING TORQUE		
TERMINAL TYPE	WIRE SIZE	TIGHTENING TORQUE
CONTROL AND ALARM TERMINALS	#14-12 AWG [2.5-4 mm^2]	5.6 lb-in [.6 Nm]

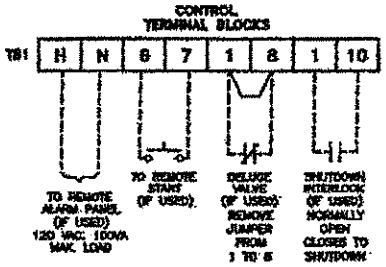

PRESSURE SYSTEM CONNECTION 1/2" FNPT

Firetrol®

ADD NOTE FOR COPPER CONDUCTORS ONLY—UPDATED LOGO AND TITLE BLOCK

FIELD CONNECTIONS FTA1930 W/FTA900, FTA950

DIGITAL SOFT START REDUCED CURRENT FIRE PUMP CONTROLLER WITH POWER TRANSFER SWITCH

THIRD ANGLE PROJECTION

DRAWN BY TEF

MANUFACTURING TOLERANCES TO BE IN ACCORDANCE WITH ASCO PROCEDURE SP-0-002, FOR FINISH PARTS SEE SP-0-003

COMPUTER GENERATED DRAWING

SCALE 1/1 SIZE A

DWG. NO. FC1930-55

REV. A SCH. NO. 226253 SHEET 1 OF 2

ASCO Power Technologies, L.P. Florham Park, New Jersey 07932 U.S.A.

PROPERTY OF ASCO POWER TECHNOLOGIES. USE PERMITTED FOR OUR WORK ONLY. ALL RIGHTS OF WORK OR INVENTION ARE RESERVED.

NORMAL & EMERGENCY INCOMING POWER FEED

MAX WIRE SIZE TO FIT "LUGS

LINE TERMINALS—WIRE CAPACITY AND QUANTITY (CU) (1)

MAXIMUM MOTOR HORSEPOWER						WIRE SIZE (CU) PER PHASE	WIRE SIZE SERVICE ENTRANCE GROUND LUG (CU) (2)
200V	208V	220–240V	380–415V	440–480V	550–600V		
25	25	30	50	60	75	(1) #14 AWG–#1/0 AWG (1) 2.5 MM²–50 MM²	(2) #14 AWG–#2/0 AWG (2) 2.5 MM²–70 MM²
30	30	40	60	75	100	(1) #2 AWG–#4/0 AWG (1) 35 MM²–100 MM²	(2) #14 AWG–#2/0 AWG (2) 2.5 MM²–70 MM²
50	50	60	100	125	----	(1) #4 AWG–300 kcmil (1) 25 MM²–150 MM²	(2) #14 AWG–#2/0 AWG (2) 2.5 MM²–70 MM²
60	60	----	----	150	150	(1) #6 AWG–350 kcmil (1) 16 MM² –185 MM²	(2) #6 AWG–250 kcmil (2) 16 MM²–120 MM²
100	100	100	150	250	300	(1) 250 kcmil–500 kcmil (1) 120 MM²–240 MM²	(2) #6 AWG–250 kcmil (2) 16 MM²–120 MM²
250	250	250	400	500	----	(3) #2/0 AWG–400 kcmil (3) 70 MM² –200 MM²	(2) #6 AWG–250 kcmil (2) 16 MM²–120 MM²
----	----	----	450	600	----	(4) #4/0 AWG–500 kcmil (4) 100 MM²–240 MM²	(2) #6 AWG–250 kcmil (2) 16 MM²–120 MM²

TO:

MOTOR TERMINALS—WIRE CAPACITY AND QUANTITY (CU) (1)

MAXIMUM MOTOR HORSEPOWER						WIRE SIZE (CU) PER PHASE
200V	208V	220–240V	380–415V	440–480V	550–600V	
30	30	40	60	75	100	(1) #6 AWG–#2/0 AWG (1) 16 MM²–70 MM²
50	50	60	75	125	150	(1) #6 AWG–250 kcmil (1) 16 MM²–120 MM²
75	75	100	150	200	250	(1) #4 AWG–400 kcmil (1) 25 MM²–200 MM²
100	100	----	----	250	300	(2) #4 AWG–500 kcmil (2) 25 MM²–240 MM²
200	200	200	350	500	----	(2) 250 kcmil–500 kcmil (2) 120 MM²–240 MM²
250	250	250	450	600	----	(3) #2/0 AWG–500 kcmil (3) 70 MM²–240 MM²

(1) FOR CORRECT WIRE SIZING, REFER TO *NATIONAL ELECTRICAL CODE*, NFPA 70.

(2) WHEN REQUIRED BY AUTHORITY HAVING JURISDICTION.

Firetrol®

SEE ECN:			A	228839	TEF	TEF	09/02/15
PROJECT NAME:			REV. TO	ECN NO.	BY	APV.	DATE

FIELD CONNECTIONS — FTA1930

SOLID STATE REDUCED CURRENT FIRE PUMP CONTROLLER
LINE AND MOTOR FIELD WIRE TERMINAL CAPACITY

THIRD ANGLE PROJECTION

	BY	DATE
DRAWN BY	TEF	05-09-02
CHECKED		
PROJECT APPROVAL		
FINAL APPROVAL	TEF	05-09-02

MANUFACTURING TOLERANCES TO BE IN ACCORDANCE WITH ASCO PROCEDURE MP-1-003. FOR PLASTIC PARTS SEE MP-1-006

ASSEM. REF. NO.

PROPERTY OF ASCO POWER TECHNOLOGIES. USE PERMITTED FOR OUR WORK ONLY. ALL RIGHTS OF DESIGN OR INVENTION ARE RESERVED.

ASCO® ASCO Power Technologies, L.P. FLORHAM PARK, NEW JERSEY 07932 U.S.A.

COMPUTER GENERATED DRAWING

SCALE 1:1 SIZE A

DWG. NO. FC1900-51

DRAWING REV. A ECN NO. 228839 SHEET 1 OF 1

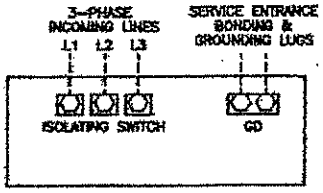

NOTE

Incoming line terminals are provided to accomodate wire sizes at 125% of motor full load current per NFPA 70, *National Electrical Code*, Table 430-250, Section 695.6(c), and Table 310-16, 75° rated Copper conductors.

-USE COPPER CONDUCTORS ONLY-

LINE TERMINALS-WIRE CAPACITY AND QUANTITY (CU) (1)

MAXIMUM MOTOR HORSEPOWER						WIRE SIZE (CU) PER PHASE	WIRE SIZE SERVICE ENTRANCE GROUND LUG (CU) (2)
200V	208V	220-240V	380-415V	440-480V	550-600V		
25	25	30	50	60	75	(1) #14 AWG-#1/0 AWG (1) 2.5 MM²-50 MM²	(2) #14 AWG-#2/0 AWG (2) 2.5 MM²-70 MM²
30	30	40	60	75	100	(1) #2 AWG-#4/0 AWG (1) 35 MM²-100 MM²	(2) #14 AWG-#2/0 AWG (2) 2.5 MM²-70 MM²
50	50	60	100	125	----	(1) #4 AWG-300 kcmil (1) 25 MM²-150 MM²	(2) #14 AWG-#2/0 AWG (2) 2.5 MM²-70 MM²
60	60	----	----	150	150	(1) #6 AWG-350 kcmil (1) 16 MM² -185 MM²	(2) #6 AWG-250 kcmil (2) 16 MM²-120 MM²
100	100	100	150	250	300	(1) 250 kcmil-500 kcmil (1) 120 MM²-240 MM²	(2) #6 AWG-250 kcmil (2) 16 MM²-120 MM²
250	250	250	400	500	500	(3) #2/0 AWG-400 kcmil (3) 70 MM² -200 MM²	(2) #6 AWG-250 kcmil (2) 16 MM²-120 MM²
----	----	300	500	600	----	(4) #4/0 AWG-500 kcmil (4) 100 MM²-240 MM²	(2) #6 AWG-250 kcmil (2) 16 MM²-120 MM²

(1) FOR CORRECT WIRE SIZING, REFER TO *NATIONAL ELECTRICAL CODE*, NFPA 70.

(2) WHEN REQUIRED BY AUTHORITY HAVING JURISDICTION.

CONTROL AND ALARM TERMINAL BLOCKS

62	63	70	71	81	82	83	84

NORMALLY CLOSED -OPENS TO START ENGINE

NORMALLY OPEN -CLOSES TO START ENGINE

CONTACT OPEN WHEN TRANSFER SWITCH IS IN NORMAL, CLOSED WHEN IN EMERGENCY

CONTACT CLOSED WHEN TRANSFER SWITCH IS IN NORMAL, -OPENS WHEN IN EMERGENCY

ENGINE START CONTACTS

TRANSFER SWITCH POSITION INDICATOR CONTACTS FOR REMOTE ALARM CIRCUITS

MODIFICATION
ALARM TERMINAL BLOCKS

81A	82A	83A	84A

CONTACT OPEN WHEN TRANSFER SWITCH IS IN NORMAL, CLOSED WHEN IN EMERGENCY

CONTACT CLOSED WHEN TRANSFER SWITCH IS IN NORMAL, -OPENS WHEN IN EMERGENCY

TRANSFER SWITCH POSITION INDICATOR CONTACTS FOR REMOTE ALARM CIRCUITS (MODIFICATION -EC)

* MUST WIRE UP "ENGINE START"

NOTE: CONTROL AND ALARM TERMINALS FOR CUSTOMER CONNECTIONS REQUIRE 3.5MM SLOTTED SCREW DRIVER

TERMINAL WIRE CAPACITY	
TERMINAL TYPE	WIRE SIZE
CONTROL AND ALARM TERMINALS	#14-12 AWG [2.5-4 MM²]

-NOTE-
ENGINE START CONTACT RATING 1/2 AMP, 30VDC

-NOTE-
ALARM CONTACT RATING PILOT DUTY 240 VAC, 28 VDC 5 AMP MAX. LOAD

REVISED LINE TREMINAL CHART	A	228850	TEF	TEF	09/02/10
NEW ISSUE	--	228843A	TEF	TEF	08/06/10
	REV. TO	ECN NO.	BY	APP.	DATE

FIELD CONNECTIONS FTA850

POWER TRANSFER SWITCH FOR GENERATOR OR SECOND UTILITY POWER SOURCE

THIRD ANGLE PROJECTION

	BY	DATE
DRAWN BY	TEF	08/06/10
CHECKED		
PROJECT APPROVAL		
FINAL APPROVAL	TEF	08/06/10

MANUFACTURING TOLERANCES TO BE IN ACCORDANCE WITH ASCO PROCEDURE MP-1-003. FOR PLATED PARTS SEE MP-1-005. AREAS: MP, MC.

PROPERTY OF ASCO POWER TECHNOLOGIES. USE PERMITTED FOR OUR WORK ONLY. ALL RIGHTS OF DESIGN OR INVENTION ARE RESERVED.

ASCO® ASCO Power Technologies, L.P. FLORHAM PARK, NEW JERSEY 07932 U.S.A.

COMPUTER GENERATED DRAWING

SCALE 1:1 SIZE A

DWG. NO. FC950-55

DRAWING REV. A ECN NO. 228850 SHEET 1 OF 1

Firetrol®

1/2" AIR RELEASE VALVE

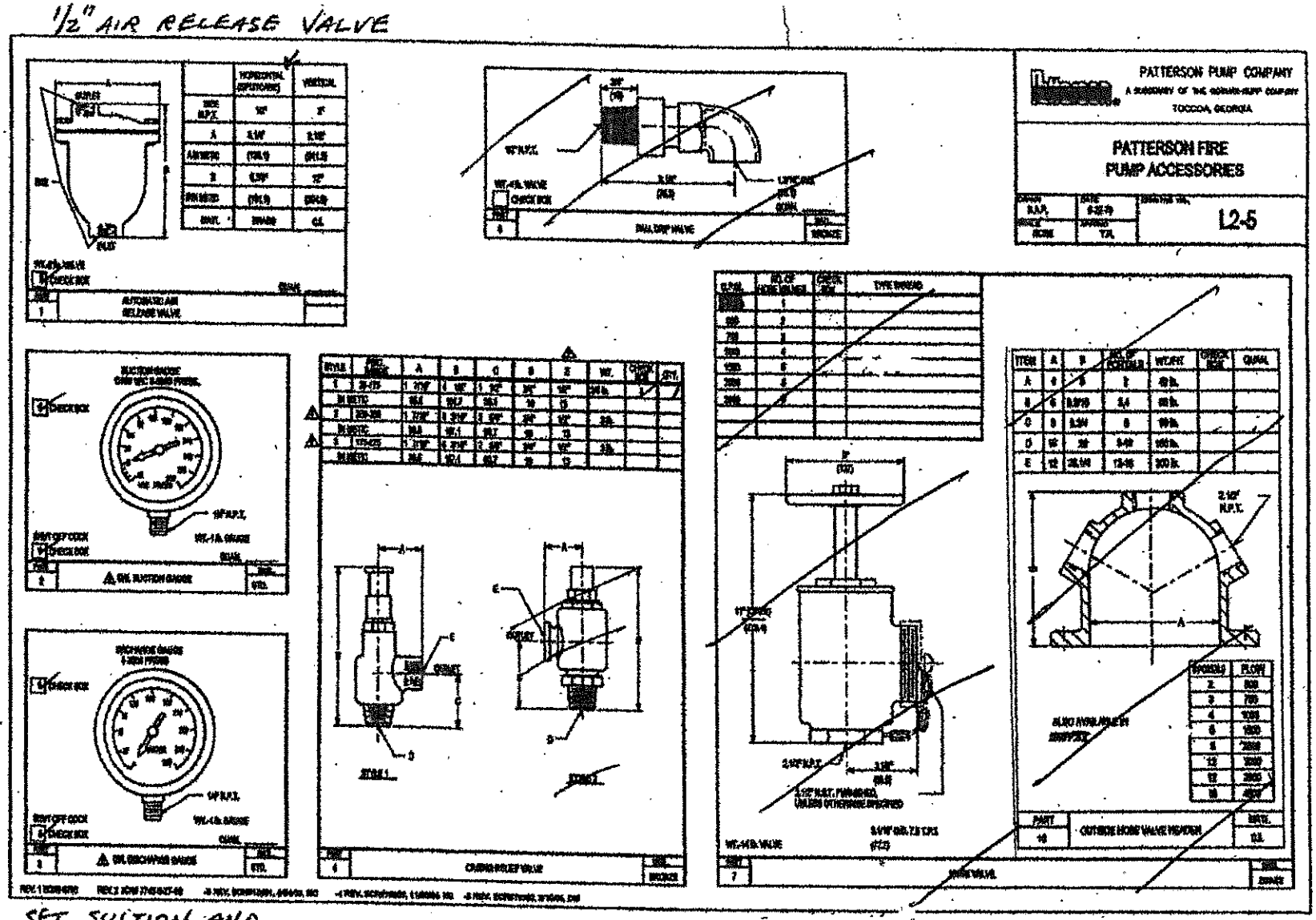

SET, SUCTION AND DISCHARGE GAUGES W/ SHUTOFF COCKS GLYCERIN FILLED

3/4" CASING RELIEF VALVE

CLA VALVE 55 L
U.L. LISTED

JOCKEY PUMP

Patterson PM1 Multistage Pumps

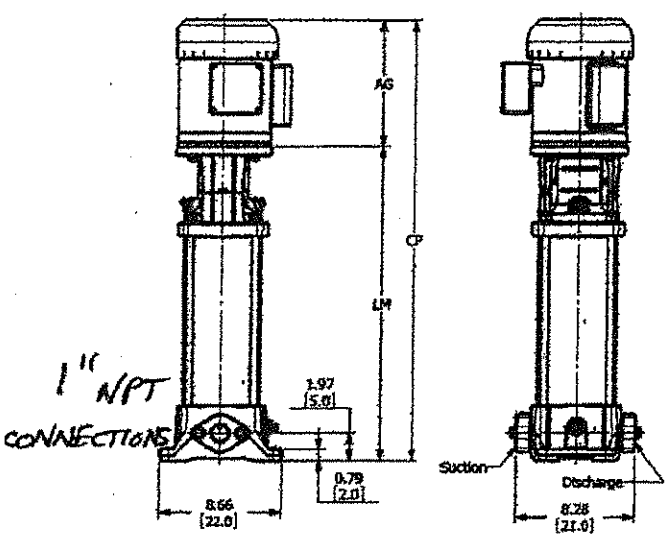

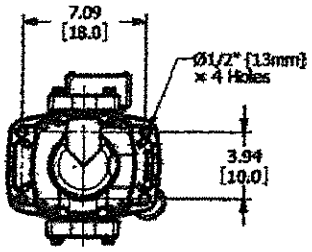

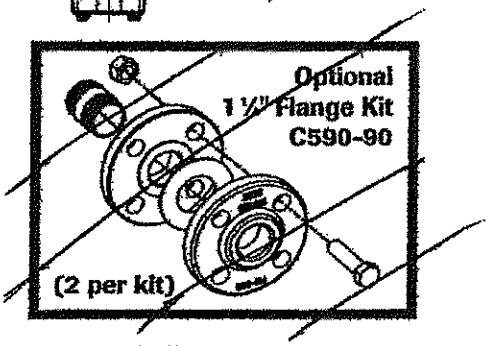

Pumps are interchangeable with Grundfos CR1 Series *

SPECIFICATIONS AND DIMENSIONS (Inches [cm]) 1" Female NPT Suction and Discharge Ports

MODEL ▲	STAGES	HP	AG†	LM	CP†	Ship Wt. 1 PHASE (-1P)	Ship Wt. 3 PHASE (-3P)
PM1-2	2	1/2	9.04 [23.0]	10.97 [27.9]	20.01 [50.8]	59 lbs. [27 kgs.]	56 lbs. [25 kgs.]
PM1-3	3	1/2	9.04 [23.0]	10.97 [27.9]	20.01 [50.8]	60 lbs. [27 kgs.]	57 lbs. [26 kgs.]
PM1-4	4	1/2	9.04 [23.0]	11.68 [29.7]	20.72 [52.6]	61 lbs. [28 kgs.]	57 lbs. [26 kgs.]
PM1-5	5	1/2	9.04 [23.0]	12.39 [31.5]	21.43 [54.4]	62 lbs. [28 kgs.]	58 lbs. [26 kgs.]
PM1-6	6	3/4	9.04 [23.0]	13.09 [33.3]	22.13 [56.2]	68 lbs. [31 kgs.]	60 lbs. [27 kgs.]
PM1-7	7	3/4	9.04 [23.0]	13.80 [35.1]	22.84 [58.0]	69 lbs. [31 kgs.]	61 lbs. [28 kgs.]
PM1-8	8	1	10.22 [26.0]	14.51 [36.9]	24.73 [62.8]	70 lbs. [32 kgs.]	66 lbs. [30 kgs.]
PM1-9	9	1	10.22 [26.0]	15.22 [38.7]	25.44 [64.6]	71 lbs. [32 kgs.]	67 lbs. [30 kgs.]
PM1-10	10	1	10.22 [26.0]	15.93 [40.5]	26.15 [66.4]	72 lbs. [33 kgs.]	68 lbs. [31 kgs.]
PM1-11	11	1	10.22 [26.0]	16.64 [42.3]	26.86 [68.2]	~~77 lbs. [35 kgs.]~~	72 lbs. [32 kgs.]
PM1-12	12	1	10.22 [26.0]	17.35 [44.1]	27.57 [70.0]	~~79 lbs. [35 kgs.]~~	72 lbs. [33 kgs.]
PM1-13	13	1	10.22 [26.0]	18.06 [45.9]	28.28 [71.8]	79 lbs. [36 kgs.]	73 lbs. [33 kgs.]
PM1-15	15	2	11.40 [29.0]	19.47 [49.5]	30.87 [78.4]	87 lbs. [34 kgs.]	80 lbs. [36 kgs.]
PM1-17	17	2	11.40 [29.0]	20.89 [53.1]	32.29 [82.0]	89 lbs. [35 kgs.]	81 lbs. [37 kgs.]
PM1-19	19	2	11.40 [29.0]	22.31 [56.7]	33.71 [85.6]	90 lbs. [35 kgs.]	83 lbs. [38 kgs.]
PM1-21	21	3	11.80 [30.0]	23.72 [60.3]	35.52 [90.2]	101 lbs. [46 kgs.]	89 lbs. [40 kgs.]
PM1-23	23	3	11.80 [30.0]	25.14 [63.9]	36.94 [93.8]	102 lbs. [46 kgs.]	91 lbs. [41 kgs.]
PM1-25	25	3	11.80 [30.0]	26.56 [67.5]	38.35 [97.4]	104 lbs. [47 kgs.]	92 lbs. [42 kgs.]
PM1-27	27	3	11.80 [30.0]	27.98 [71.1]	39.77 [101]	106 lbs. [48 kgs.]	94 lbs. [43 kgs.]

NOTE: All dimensions have a tolerance of ±1/8" [0.3] (†) Dimension may vary due to motor manufacturer's specifications.

▲ When Ordering Add the Correct Suffix (-?P) to Model Number Indicating Phase (ex. PM1-2-1P)

SINGLE PHASE (-1P) VOLTAGES	60HZ= 1/2 HP - 2 HP 115/208-230 VAC and 3 HP 208-230 VAC 50HZ= 110/220 VAC except 3 HP 220 VAC ONLY
THREE PHASE (-3P) VOLTAGES	60HZ= 1/2 HP - 3 HP 208-230/460 VAC ~~50HZ= 190/380 VAC~~

*Electric supply for ALL motors must be within ± 10% of nameplate voltage rating

5 GPM @ 125 PSI

PM1 – 12

1½ HP 460 VOLT

Patterson PM1 Series Jockey Pump

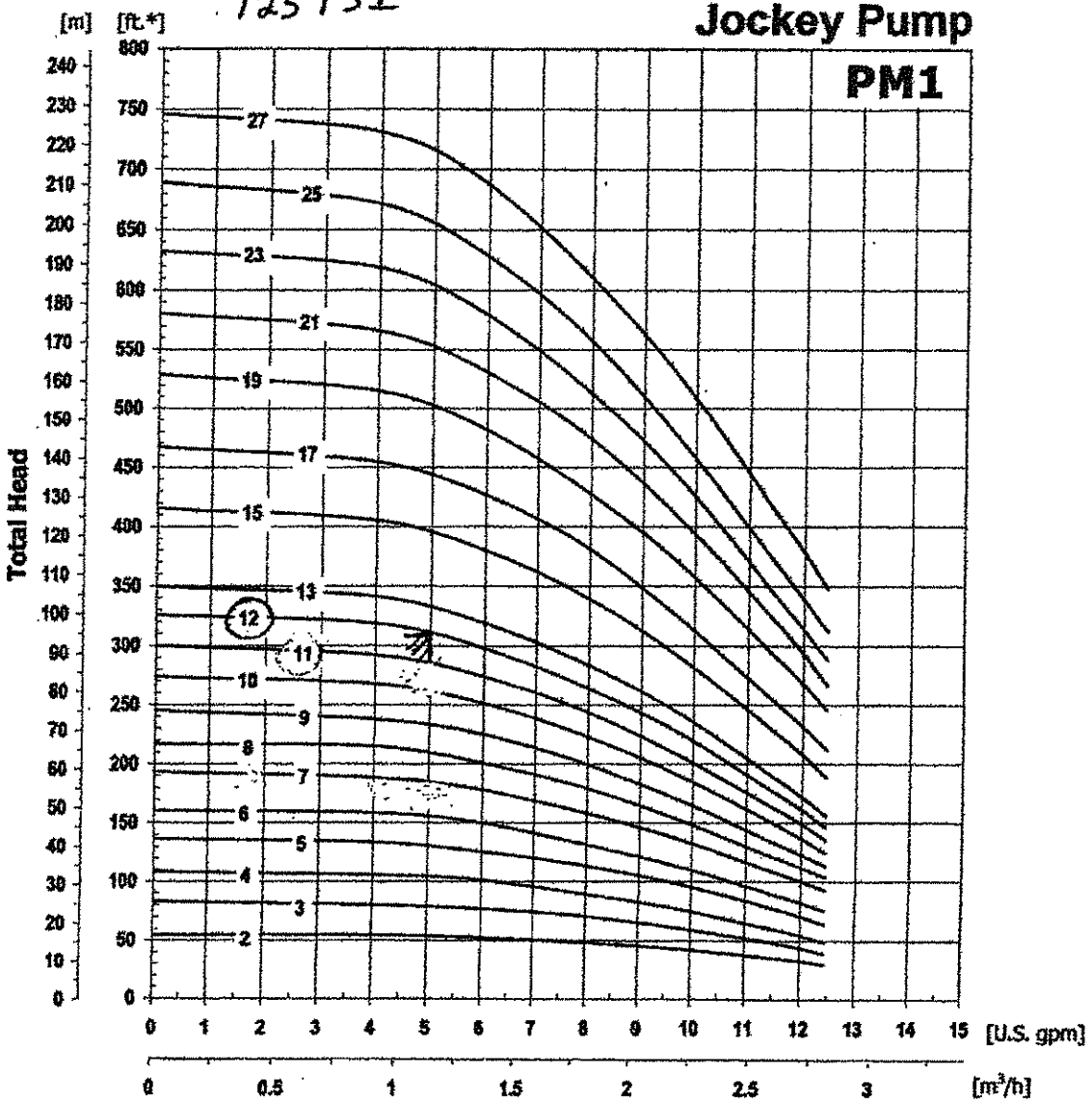

Capacity @ 3450 RPM (60 Hz)

(*) Convert to psi, divide by 2.31 Liquid - Water specific gravity 1.0

Patterson Pump Company
2129 Ayersville Road
PO Box 790
Toccoa, GA 30577
www.pattersonpumps.com

PATTERSON PUMP COMPANY

A Subsidiary of the Gorman Rupp Company

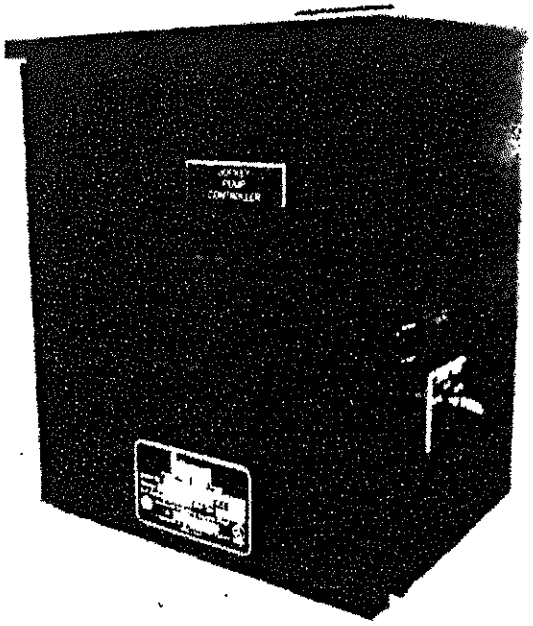

$1\frac{1}{2}$ HP 3-60-460 VOLT

JOCKEY PUMP CONTROLLERS

UL508 LISTED **ETL LISTED**

FEBRUARY 2008

STANDARD JOCKEY PUMP CONTROLLER NEMA TYPE 3R ENCLOSURE

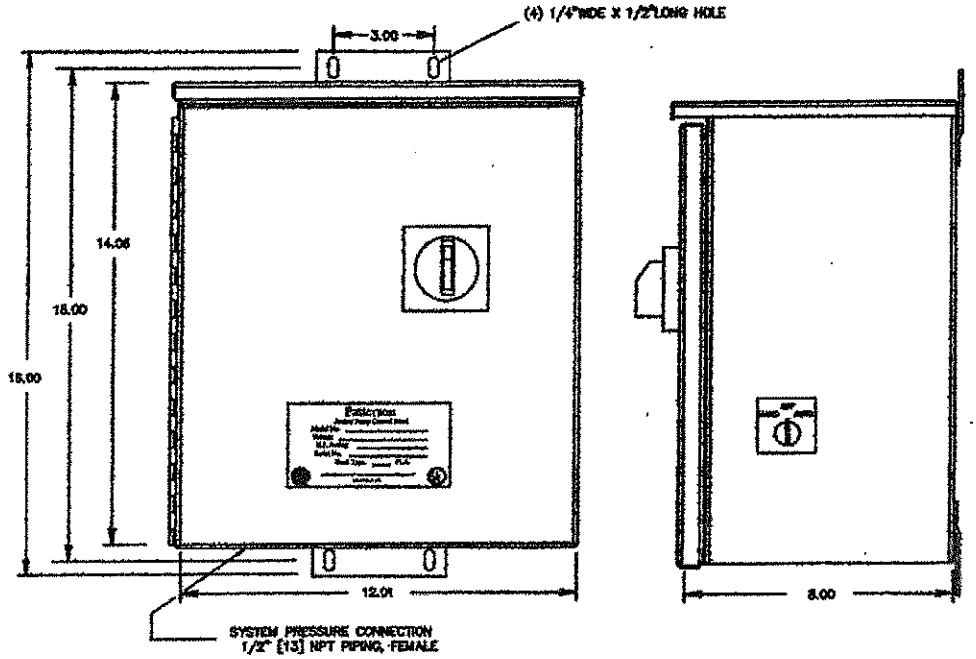

STANDARD JOCKEY PUMP CONTROLLER ELECTRICAL SCHEMATIC

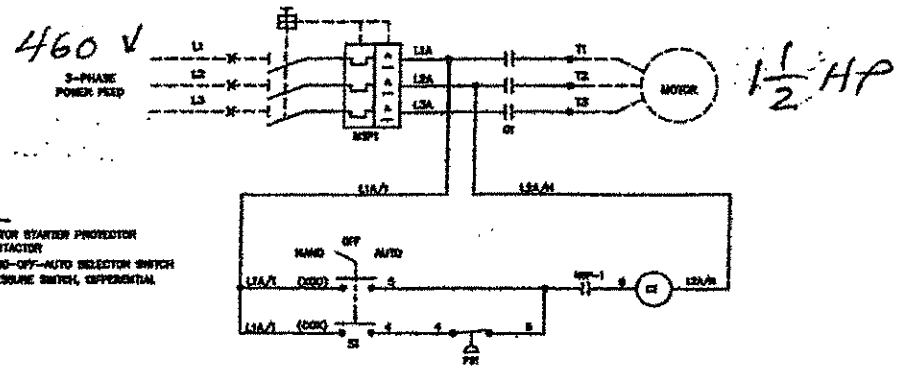

LEGEND

MSP1 – MOTOR STARTER PROTECTOR
CT – CONTACTOR
S1 – HAND-OFF-AUTO SELECTOR SWITCH
PS1 – PRESSURE SWITCH, DIFFERENTIAL

STANDARD RATINGS

HORSEPOWER	VOLTAGE	WIRE SIZE (CU) PER PHASE
0.5 – 10	575/3/60	(1) #14 AWG (1) [2.0 MM SQ.]
0.5 – 10	460/3/60	(1) #14 AWG (1) [2.0 MM SQ.]
0.5 – 10	380/3/50	(1) #14 – #8 AWG. (1) [2 – 8 MM SQ.]
0.5 – 10	240/3/50	(1) #8 AWG. (1) [8 MM SQ.]
0.5 – 10	208/3/60	(1) #8 AWG. (1) [8 MM SQ.]
0.33 – 2	120/1/60	(1) #10 AWG (1) [5 MM SQ.]
0.33 – 2	240/1/60	(1) #14 AWG (1) [2 MM SQ.]

NOTES:

- ENCLOSURE MADE FROM 16 GA. STEEL.
- ENTER EITHER TOP OR BOTTOM.
- WALL MOUNTING.
- STANDARD PADLOCKABLE DRAW LATCH NOT SHOWN.
- MERCOID PRESSURE SWITCH CAN BE SUPPLIED AS AN OPTION. (REQUIRES A 16GX16X8 ENCLOSURE)
- STANDARD ENCLOSURE NEMA TYPE 3R.
- FINISH: RED PAINTED BAKED ENAMEL FINISH.
- INTERRUPTING CAPACITY 65ka UP TO 480VAC.
- CONTROL TRANSFORMER PER PRIMARY VOLTAGE REQUIREMENTS.

CLA-VAL™

6"

— MODEL — 50B-5KG

– Pump Suction Control Valve

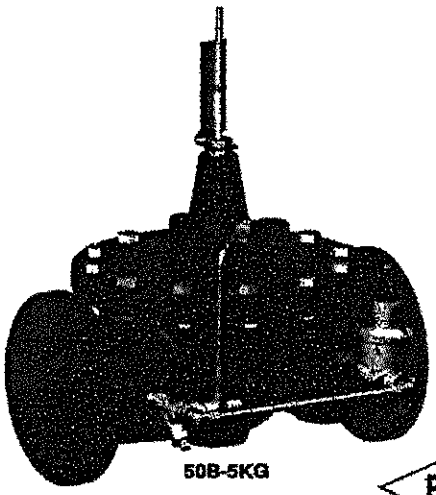

50B-5KG

FM APPROVED

- **Adjustable Opening Speed For Pump Suction Protection**
- **Pilot Control Provides Wide Flow Range With Minimal Pressure Variations**
- **Controlled Closing For System Protection**
- **Modulates Within 5% of Setting for Accurate Pressure Control**
- **Pressure Setting Adjustable**
- **Pressure Setting Not Affected by Pressure at Valve Discharge**

The Model 50B-5KG Pump Suction Control Valve is designed specifically for Fire Pump Suction Control Service. It modulates to maintain the pump discharge in relation to the suction head available, thus assuring that the suction head pressure does not fall below the pre-set minimum.

Typical Installation

When there is a demand in the Fire System, the pump is started, delivering water from the supply source to the area of demand. To assure that the fire pump draw does not exceed the available water supply, the Model 50B-5KG, sensing the pump suction, modulates to prevent suction pressure from dropping below a pre-set minimum.

By maintaining minimum pressure requirements in the supply main, the main is protected from possible damage or backflow conditions. Also, a minimum supply pressure is provided for local fire apparatus.

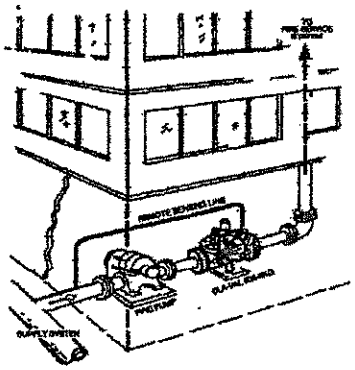

Specifications

6"

Sizes	*Globe:* 3" - 8" flanged ~~*Angle:* 2" - 8" flanged~~
End Details	150 and ~~300~~ ANSI B16.42
Pressure Ratings	150 class - 250 psi Max. ~~300 class - 400 psi Max.~~
Temperature Range	Water, to +180°F Max.
Materials	***Main valve body & cover*** Ductile Iron ASTM A-536 ***Main valve trim:*** Brass QQ-B-626 Bronze Seat ASTM B61 Stainless Steel Stem 303 Delrin Sleeved ***Pilot control system:*** Cast Bronze ASTM B62 with 303 Stainless Steel trim
Adjustment Range	Available in the following pressure range only: 5 to 25 psi Set at 10 psi

CLA-VAL™

Dimensions (in inches)

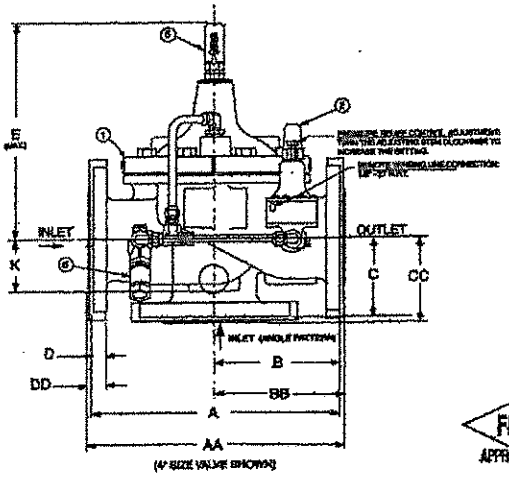

Flow Chart

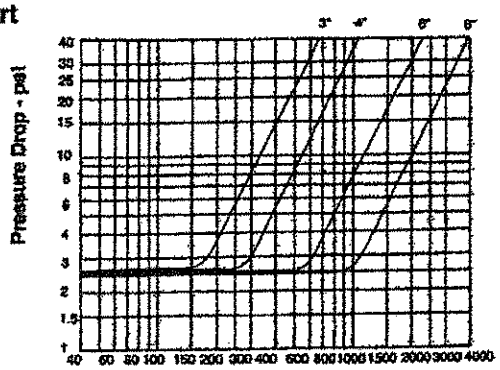

FM APPROVED

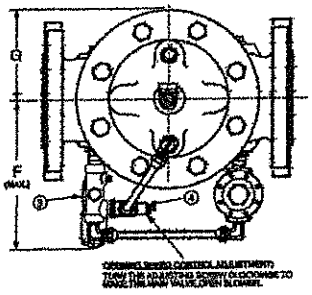

Item No.	Description
1	100KCGVX Hytrol (Main Valve)
2	CRL5A Pressure Relief Control
3	X44A Strainer and Orifice Assembly
4	CV Flow Control (Opening)
5	X101C Valve Position Indicator
6	CK2 (Blow-Off Valve)

VALVE SIZE	A 150 LB. FLANGES	AA 300 LB. FLANGES	B 150 LB. FLANGES	BB 300 LB. FLANGES	C 150 LB. FLANGES	CC 300 LB. FLANGES	D (TYP.) 150 LB. FLANGES (MIN.)	DD (TYP.) 300 LB. FLANGES (MIN.)	E (MAX.)	F (MAX.)	G (MAX.)	K
3"	12.00	13.25	6.00	6.38	4.00	4.38	.75	1.12	15.75	13.50	4.62	2.56
4"	15.00	15.62	7.50	7.88	5.00	5.31	.94	1.25	17.75	15.00	5.75	3.12
6"	20.00	~~19.00~~	10.00	~~10.50~~	6.00	~~6.50~~	1.00	~~1.12~~	20.25	16.50	7.88	4.31
8"	25.38	~~23.50~~	12.75	~~13.25~~	8.00	~~8.50~~	1.12	~~1.00~~	23.00	20.00	10.00	5.31

Purchase Specifications

The Fire Pump Suction Control Valve shall modulate to maintain a minimum pressure at the pump suction regardless of system demand. It shall control the pump discharge in relation to the suction head available, and shall not allow suction head pressure to fall below a pre-set minimum.

It shall be actuated by line pressure through a pilot control system which allows rapid response to changing pressure conditions without line surges. The pilot control shall be remote sensed to the pump suction head pressure.

The main valve shall be of the hydraulically-operated, pilot-controlled, diaphragm-type, globe or angle valve. It shall have a single removable seat, a delrin-sleeved guided stem and a renewable resilient synthetic rubber disc with a rectangular cross section, contained on three and one-half sides by a disc retainer and disc guide. No external packing glands shall be permitted and the diaphragm shall not be used as a seating surface. The pilot control shall be a direct-acting, adjustable, spring-loaded, diaphragm-type valve designed for modulating service to permit flow when controlling pressure exceeds spring setting.

A device indicating the percent at which the valve is open or closed shall be supplied on the assembly, together with a sediment evacuator and dampening device.

The valve shall be designed to allow for repair and servicing without removing the valve body from the line.

The valve shall be Factory Mutual Approved. It shall be the MODEL 50B-5KG FIRE PUMP SUCTION CONTROL VALVE as manufactured by Cla-Val, Newport Beach, California.

CLA-VAL

CLA-VAL

PO Box 1325 Newport Beach CA 92659-0325 • Phone: 949-722-4800
Fax: 949-548-5441 • Web Site: cla-val.com • E-mail: claval@cla-val.com

CLA-VAL CANADA
4687 Christie Drive
Beamsville, Ontario
Canada L0R 1B4
Phone: 905-563-4963
Fax: 905-563-4040
E-Mail: sales@cla-val.ca

CLA-VAL EUROPE
Chemin des Mésanges 1
CH-1032 Romanel/
Lausanne, Switzerland
Phone: 41-21-643-15-55
Fax: 41-21-643-15-60
E-Mail: cla-val@cla-val.ch

CLA-VAL UK
Dalton House, Goods Station Road
GB - Tunbridge Wells
Kent TN1 2 DH England
Phone: 44-1892-514-400
Fax: 44-1892-543-423
E-Mail: info@cla-val.co.uk

Represented By:

©Copyright CLA-VAL 2011 Printed in USA. Specifications subject to change without notice.